HYPNOTIC™

HYS40 | 4-Way Loudspeakers

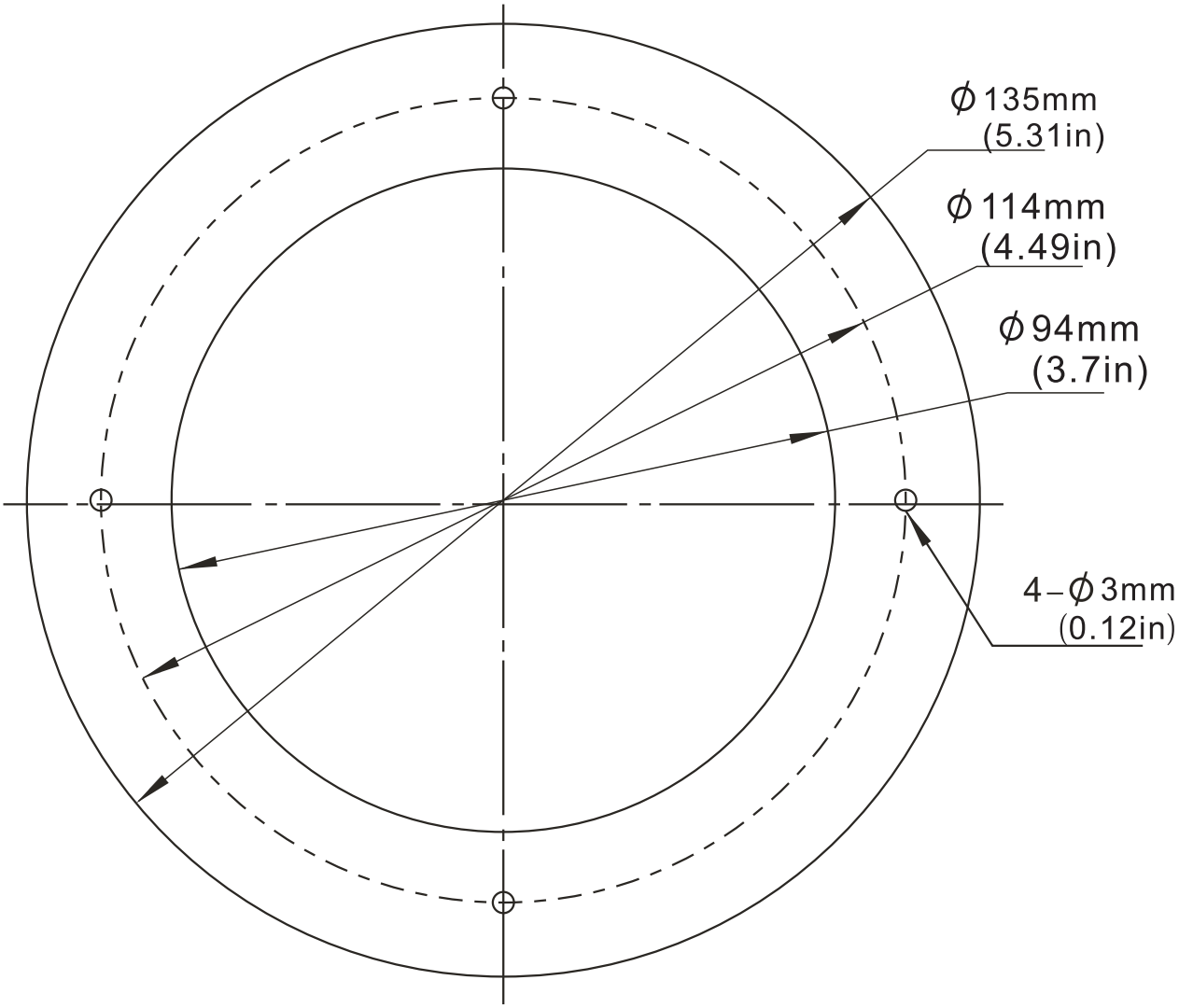

Mounting Template